DRG No	IC	SS	S	AA	A	C	SST
	8603	02	01	00	00	048	00XA

GEN. TOL : MEDIUM CLASS TO IS:2102

DRAWING CONVENTION CONFORM TO INDIAN STD. DIMNS. IN mm UNLESS OTHERWISE STATED.

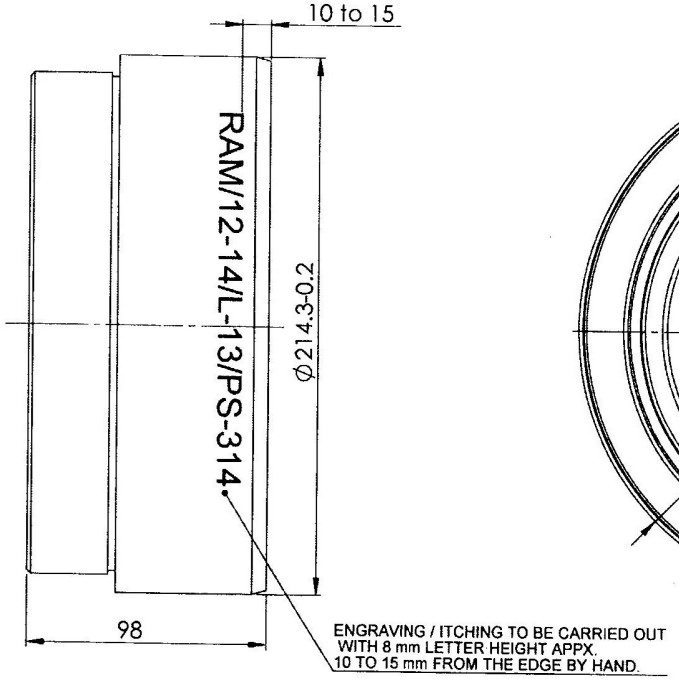

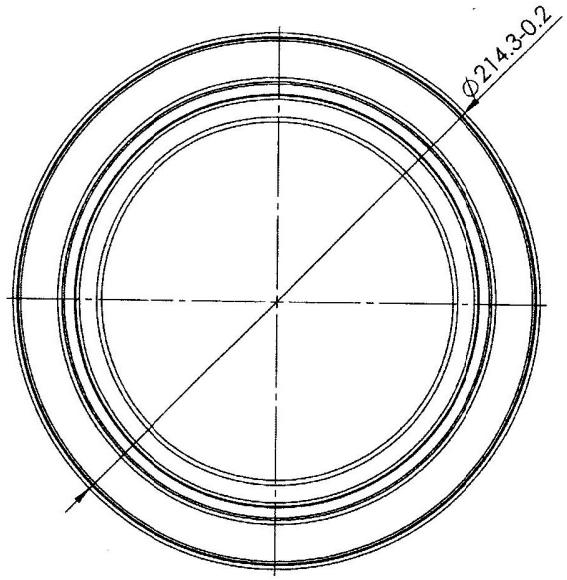

V S KARKHANIS
Jr. Tech Officer
Dy Asstt. Controller

4 SEP 2015

CDA (AMN) KHADKI PUNE

Note :

1. **Numbering of component:**
   The manufacturer shall number all the component / assembly by engraving/itching without causing any damage to the functional features. The engraved marking should indicate the contractors name, date of manufacture(mm-yy), lot number, and component/assembly number (for Plug end closing assy. as 'PS' followed by running serial no.).
   Contractor name/ month-year/lot number/ PS- component number = xxx / mm-yy / x-xx / PS-xxx.
   The engrave/itching position for numbering on component/assembly on Ø214.3 - 0.2 and 10 to15 mm appx. from the edge.

   EX: RAM/12-14/L-13/PS- 314

2. For QA & QC refer specification No. ARDE / SPECN / PINAKA / RKT- 13

R No.	DATE	AUTHORITY	BRIEF RECORD	ZONE	CD	GO
					SIGN	

DRN. P K SINGH	CHD. SOP	MATERIAL:
APPD. DATE: 26 3 75	SRS FOR DIRECTOR	PROTECTIVE FINISH:
SEALED DATE:		ASSY. DRG No.:
SCALE : NTS	EST. MASS	TITLE: PLUG END CLOSING MACHINING-STATIC (FOR NUMBER ENGRAVING / ITCHING)
DESIGN AUTHORITY ARDE		

DRG.No	IC	SS	S	AA	A	C	SST
	8603	02	01	00	00	048	00XA

PART No.	DS CAT No.	AHSP 48