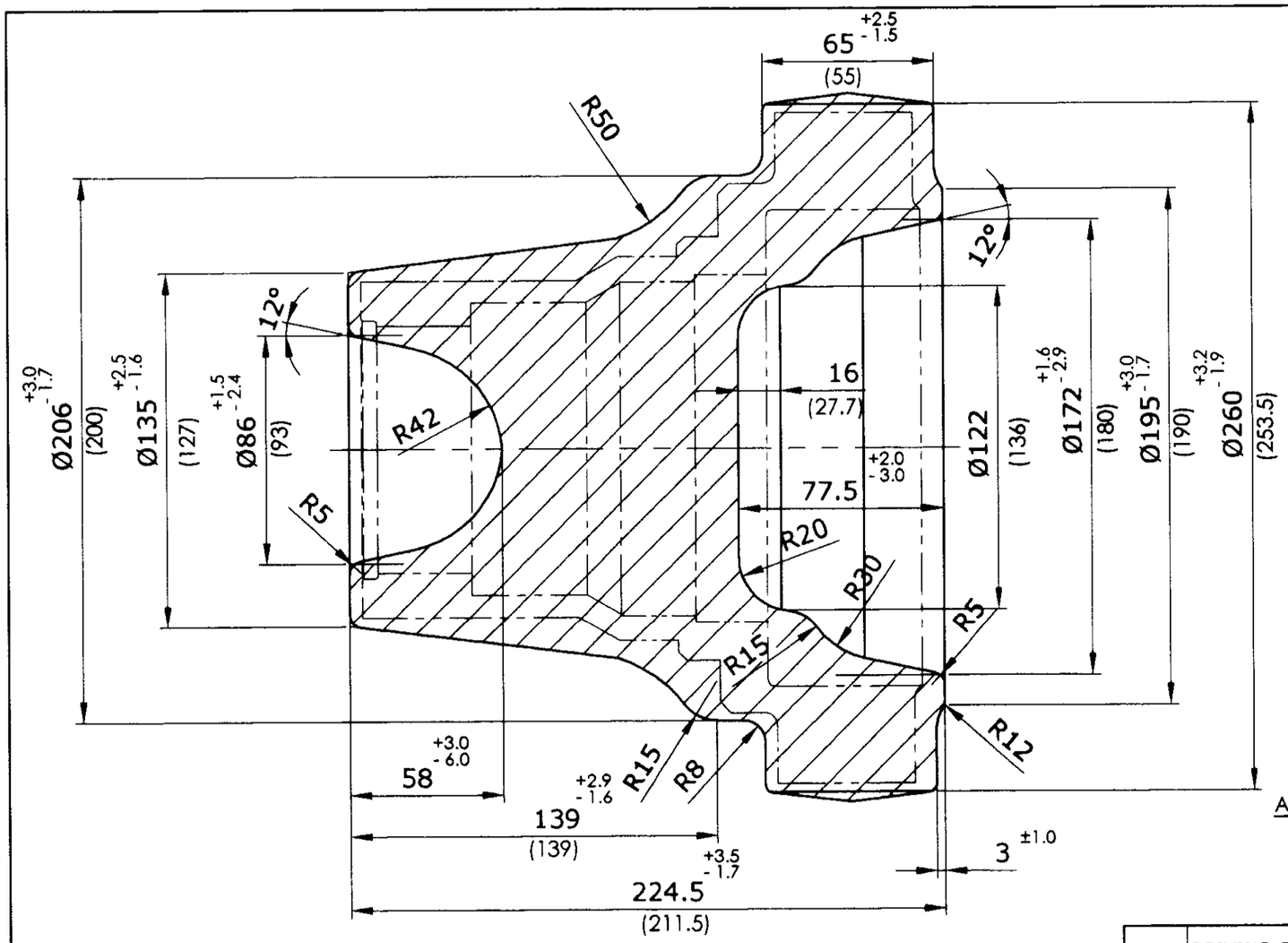

CHEMICAL COMPOSITION (%)		
ELEMENT	STEEL 20X2H4A GOST 4543-71	STEEL 835M15 (EN-39B) BS: 970-83
C	0.16 - 0.22	0.12 - 0.18
Si	0.17 - 0.37	----------
Mn	0.30 - 0.60	0.25 - 0.50
Cr	1.25 - 1.65	1.00 - 1.40
Ni	3.25 - 3.65	3.90 - 4.30
Mo	----------	0.15 - 0.30
Cu	0.30 MAX.	----------
S	0.025 MAX.	0.040 MAX.
P	0.025 MAX.	0.035 MAX.

MECHANICAL PROPERTIES		
DESCRIPTION	STEEL 20X2H4A GOST 4543-71	STEEL 835M15 (EN-39B) BS: 970-83
TEST BAR DIA.	------	19 mm
TENSILE STRENGTH	130 Kgf/mm² MIN.	1310 MPa MIN.
YIELD STRENGTH	110 Kgf/mm² MIN.	-----
RELATIVE ELONGATION	9 % MIN.	8 % MIN.
REDUCTION OF AREA	45 % MIN.	------
HARDNESS BHN	269 MAX.	269 MAX.
IMPACT STRENGTH	8 Kgf.m/cm² MIN.	------
IZOD	------	25 MIN.
KCV (CHARPY)	------	28 MIN.

ALTERNATE MATERIAL: STEEL EN39B TO BS:970 - 83

AUTHORITY: CQA(HV) LETTER No. 091/IFD/IND-V/MTPF/OE Dt.11.02.2005

TECHNICAL REQUIREMENTS

1. HEAT TREAT.DIA.OF IND. 3.7-4.2 MM, HRC 22-28.
2. DESCALE.
3. DEPTH OF SURFACE DEFECTS AND SCALE PITS UPTO 0.5 ACTUAL MACHINING ALLOWANCE ARE ALLOWED.
4. MISMATCH SHOULD NOT EXCEED 0.8 MM.
5. RESIDUAL FIN ALONG PARTING LINE SHOULD NOT EXCEED 1.0 MM.
6. BUCKLING SHOULD NOT EXCEED 0.8 MM.
7. MARK PART NO.
8. UNSPECIFIED DRAFTS = 7°.
9. UNSPECIFIED RADII = R3.0 MM.
10. MACHINING DIMENSIONS ARE SHOWN IN BRACKETS.
11. UNTOLERANCED DIMENSIONS ARE FOR CONSTRUCTION.
12. FORGING SHOULD BE SUPPLIED IN NORMALISED CONDITION.
13. PILOT SAMPLE SHOULD BE APPROVED BEFORE BULK SUPPLY.
14. PAINT RED OXIDE.
15. PILOT SAMPLE SHOULD BE APPROVED BEFORE BULCK SUPPLY.

TTED
8 APR 2006
JWM/STD-CELL

THE COPYRIGHT OF THESE DRAWINGS AND ALL ATTACHMENTS THERE TO BELONGS TO THE INDIAN ORDNANCE FACTORIES, MINISTRY OF DEFENCE, GOVT OF INDIA THEY SHOULD NOT BE COPIED, REPRODUCED IN ANY WAY OR THE INFORMATION CONTAINED THEREIN MADE AVAILABLE TO UNAUTHORISED PERSONS WITHOUT THE WRITTEN PERMISSION OF THE DIRECTOR OF ORDNANCE FACTORIES.

मूलमाप व अन्वायोजन NOMINAL SIZE & FIT	विचलन DEVIATION

	DRIVING GEAR(FORGING DRG.)		20X2H4A,	GOST 4543-71		Wt.=40.1Kg
संख्या NO OFF	विवरण DESCRIPTION	पुर्जा क्र. PART NO	पदार्थ MATERIAL	मानक STANDARD	परिमाप DIMENSIONS	अभ्यक्ति REMARKS

सामान्य सहिष्णुता GENERAL TOLERANCE	
रेखिक परिमाप LINEAR DIMENSION	
0-6	±0.1
6-30	±0.2
30-120	±0.3
120-315	±0.5
315-1000	±0.8
1000-2000	±1.2
कोणिक परिमाप ANGULAR DIMENSION	
1-10	±1°
10-50	±30'
50-100	±20'
>100	±10'
मापांक 'म्यू एम' में VALUE IN "um"	
~	>25
▽	8-25
▽▽	1.6-8
▽▽▽	0.025-1.6
▽▽▽▽	<0.025

संख्या NO OFF	संबंधित पुर्जोंका आरेखण क्र. DRG. NO. OF ASSOCIATED PART	सूचक INDEX	संशोधन ALTERATION	2006	दिनांक DATE	नाम NAME

DRIVING GEAR (FORGING Drg.)
FOR COMP. No. 175-45-004
TRANSMISSION GEAR UNIT
CODE-45/T-72 & T-90

मापमान SCALE	आरेखित DRAWN	07.04.06	SELVI
1:2	जाँचा CHECKED	10.04.06	
	अनुमोदित APPROVED	10/4/06	

द्वारा बदला REPLACED BY
हेतु बदला REPLACED FOR

मशीनी औजार आदिरूप फैक्टरी, अम्बरनाथ
MACHINE TOOL PROTOTYPE FACTORY, AMBERNATH

कार्यालय OFFICE: DO

आरेखण क्र. DRAWING NO. 175-45-004 / F

DRG. DEVELOPED FROM HVF Drg. PRINT

Path. D:\Selvi \Code \Code45 \175-45-004F